180~240W Constant Voltage + Constant Current LED Driver ELG-240 series



(for DA-Type only) SELV IP65 IP67 Type HL

Features

- Constant Voltage + Constant Current mode output
- Metal housing design with functional Ground
- Built-in active PFC function
- No load / Standby power consumption <0.5W
- IP67 / IP65 rating for indoor or outdoor installations
- Function options: output adjustable via potentiometer; 3 in 1 dimming (dim-to-off); Smart timer dimming; DALI
- Typical lifetime>50000 hours
- 5 years warranty

Applications

- LED street lighting
- LED architectural lighting
- LED bay lighting
- LED floodlighting
- Type "HL" for use in Class I, Division 2 hazardous (Classified) location.
- Comply with class Ⅱ application

Description

ELG-240 series is a 240W AC/DC LED driver featuring the dual mode constant voltage and constant current output. ELG-240 operates from 100～305VAC and offers models with different rated voltage ranging between 24V and 54V. Thanks to the high efficiency up to 93%, with the fanless design, the entire series is able to operate for -40℃ ~ +90℃ case temperature under free air convection. The design of metal housing and IP67/IP65 ingress protection level allows this series to fit both indoor and outdoor applications. ELG-240 is equipped with various function options, such as dimming methodologies, so as to provide the optimal design flexibility for LED lighting system

Model Encoding

ELG - 240 - 24 A - □

- Input wiring type { Blank:2-wire input for standard model / 3Y:3-wire input for standard model
- Function mode option
- Rated output voltage(24/36/42/48/54V)
- Rated wattage
- Series name

Type	IP Level	Function	Note
Blank	IP67	Io and Vo fixed.	In Stock
A	IP65	Io and Vo adjustable through built-in potentiometer.	In Stock
B	IP67	3 in 1 dimming function (0~10Vdc, 10V PWM signal and resistance)	In Stock
DA	IP67	DALI control technology.	In Stock
Dx	IP67	Built-in Smart timer dimming function by user request.	By request
D2	IP67	Built-in Smart timer dimming and programmable function.	In Stock

MEAN WELL

180~240W Constant Voltage + Constant Current LED Driver ELG-240 series

SPECIFICATION

MODEL		ELG-240-24 □	ELG-240-36 □	ELG-240-42 □	ELG-240-48 □	ELG-240-54 □
OUTPUT	DC VOLTAGE	24V	36V	42V	48V	54V
	CONSTANT CURRENT REGION Note.2	12 ~ 24V	18 ~ 36V	21 ~ 42V	24 ~ 48V	27 ~ 54V
	RATED CURRENT	10A	6.66A	5.71A	5.0A	4.45A
	RATED POWER	200VAC ~ 305VAC				
		240W	239.76W	239.82W	240W	240.3W
		100VAC ~ 180VAC				
		180W	180W	179.76W	180W	180.36W
	RIPPLE & NOISE (max.) Note.3	200mVp-p	250mVp-p	250mVp-p	250mVp-p	350mVp-p
	VOLTAGE ADJ. RANGE	Adjustable for A-Type only (via built-in potentiometer)				
		22.4 ~ 25.6V	33.5 ~ 38.5V	39 ~ 45V	44.8 ~ 51.2V	50 ~ 57V
	CURRENT ADJ. RANGE	Adjustable for A-Type only (via built-in potentiometer)				
		5 ~ 10A	3.33 ~ 6.66A	2.86 ~ 5.71A	2.5 ~ 5A	2.23 ~ 4.45A
	VOLTAGE TOLERANCE Note.4	±2.0%	±2.0%	±2.0%	±2.0%	±2.0%
	LINE REGULATION	±0.5%	±0.5%	±0.5%	±0.5%	±0.5%
	LOAD REGULATION	±0.5%	±0.5%	±0.5%	±0.5%	±0.5%
	SETUP, RISE TIME Note.6	500ms, 100ms/230VAC, 1000ms, 100ms/115VAC				
	HOLD UP TIME (Typ.)	10ms/ 230VAC 10ms/ 115VAC				
INPUT	VOLTAGE RANGE Note.5	100 ~ 305VAC 142 ~ 431VDC (Please refer to "STATIC CHARACTERISTIC" section)				
	FREQUENCY RANGE	47 ~ 63Hz				
	POWER FACTOR	PF≧0.97/115VAC, PF≧0.95/230VAC, PF≧0.92/277VAC@full load (Please refer to "POWER FACTOR (PF) CHARACTERISTIC" section)				
	TOTAL HARMONIC DISTORTION	THD< 20%(@load≧50%/115VC,230VAC; @load≧75%/277VAC) (Please refer to "TOTAL HARMONIC DISTORTION(THD)" section)				
	EFFICIENCY (Typ.)	92%	92%	92.5%	93%	93%
	AC CURRENT	2.2A / 115VAC 1.5A / 230VAC 1.2A/277VAC				
	INRUSH CURRENT(Typ.)	COLD START 60A(twidth=510μs measured at 50% Ipeak) at 230VAC; Per NEMA 410				
	MAX. No. of PSUs on 16A CIRCUIT BREAKER	4 units (circuit breaker of type B) / 6 units (circuit breaker of type C) at 230VAC				
	LEAKAGE CURRENT	<0.75mA / 277VAC				
	NO LOAD / STANDBY POWER CONSUMPTION Note.7	No load power consumption <0.5W for Blank / A / Dx / D-Type Standby power consumption <0.5W for B / DA-Type				
PROTECTION	OVER CURRENT	95 ~ 108%				
		Constant current limiting, recovers automatically after fault condition is removed				
	SHORT CIRCUIT	Hiccup mode, recovers automatically after fault condition is removed				
	OVER VOLTAGE	27 ~ 34V	42 ~ 49V	47 ~ 54V	54 ~ 63V	60 ~ 67V
		Shut down output voltage, re-power on to recover				
	OVER TEMPERATURE	Shut down output voltage, re-power on to recover				
ENVIRONMENT	WORKING TEMP.	Tcase=-40 ~ +90℃ (Please refer to " OUTPUT LOAD vs TEMPERATURE" section)				
	MAX. CASE TEMP.	Tcase=+90℃				
	WORKING HUMIDITY	20 ~ 95% RH non-condensing				
	STORAGE TEMP., HUMIDITY	-40 ~ +90℃, 10 ~ 95% RH				
	TEMP. COEFFICIENT	±0.03%/℃ (0 ~ 60℃)				
	VIBRATION	10 ~ 500Hz, 5G 12min./1cycle, period for 72min. each along X, Y, Z axes				
SAFETY & EMC	SAFETY STANDARDS	UL8750(type"HL"), CSA C22.2 No. 250.13-12; ENEC EN61347-1, EN61347-2-13 independent, EN62384; GB19510.14,GB19510.1; IP65 or IP67 approved				
	DALI STANDARDS	Compliance to IEC62386-101, 102, 207 for DA-Type only				
	WITHSTAND VOLTAGE	I/P-O/P:3.75KVAC I/P-FG:2.0KVAC O/P-FG:1.5KVAC				
	ISOLATION RESISTANCE	I/P-O/P, I/P-FG, O/P-FG:100M Ohms / 500VDC / 25℃/ 70% RH				
	EMC EMISSION	Compliance to EN55015,EN61000-3-2 Class C (@load≧50%) ; EN61000-3-3;GB17625.1,GB17743				
	EMC IMMUNITY	Compliance to EN61000-4-2,3,4,5,6,8,11; EN61547, light industry level (surge immunity Line-Earth 6KV, Line-Line 4KV)				
OTHERS	MTBF	826.7K hrs min. Telcordia SR-332 (Bellcore) ; 200.8Khrs min. MIL-HDBK-217F (25℃)				
	DIMENSION	244*71*37.5mm (L*W*H)				
	PACKING	1.22Kg; 12pcs / 15.2Kg / 0.72CUFT				

NOTE

1. All parameters NOT specially mentioned are measured at 230VAC input, rated current and 25℃ of ambient temperature.
2. Please refer to "DRIVING METHODS OF LED MODULE".
3. Ripple & noise are measured at 20MHz of bandwidth by using a 12" twisted pair-wire terminated with a 0.1uf & 47uf parallel capacitor.
4. Tolerance : includes set up tolerance, line regulation and load regulation.
5. De-rating may be needed under low input voltages. Please refer to "STATIC CHARACTERISTIC" sections for details.
6. Length of set up time is measured at first cold start. Turning ON/OFF the driver may lead to increase of the set up time.
7. No load/standby power consumption is specified for 230VAC input.
8. The driver is considered as a component that will be operated in combination with final equipment. Since EMC performance will be affected by the complete installation, the final equipment manufacturers must re-qualify EMC Directive on the complete installation again.
9. This series meets the typical life expectancy of >50,000 hours of operation when Tcase, particularly (tc) point (or TMP, per DLC), is about 70℃ or less.
10. Please refer to the warranty statement on MEAN WELL's website at http://www.meanwell.com

■ Block Diagram

PFC fosc : 50~120KHz
PWM fosc : 60~130KHz

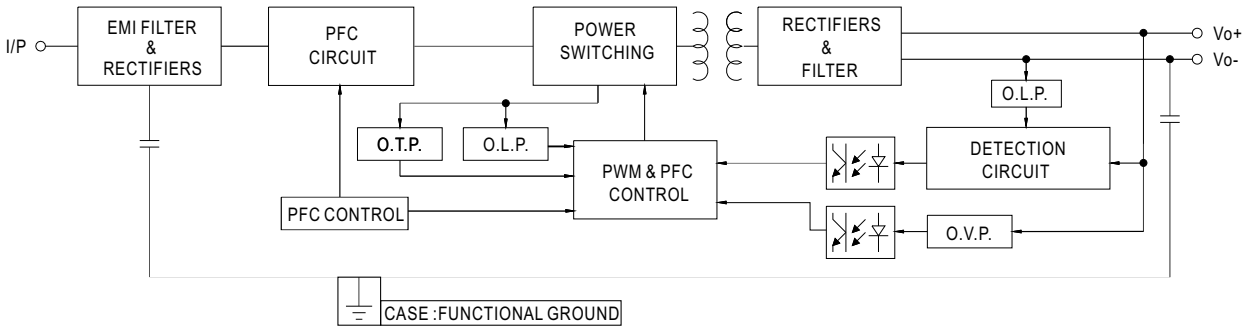

■ DRIVING METHODS OF LED MODULE

※ This series is able to work in either Constant Current mode (a direct drive way) or Constant Voltage mode (usually through additional DC/DC driver) to drive the LEDs.

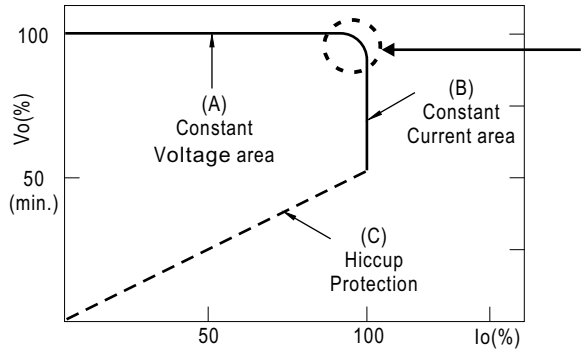

Typical output current normalized by rated current (%)

In the constant current region, the highest voltage at the output of the driver depends on the configuration of the end systems.

Should there be any compatibility issues, please contact MEAN WELL.

■ DIMMING OPERATION

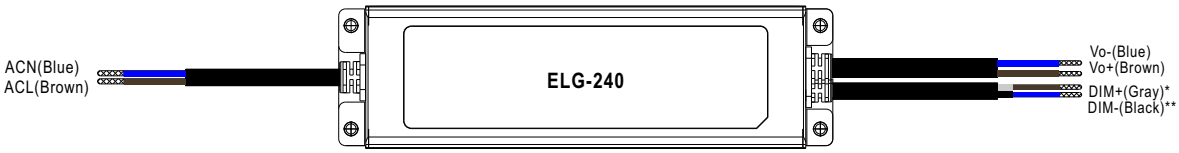

* DIM+ for B-Type
DA+ for DA-Type
PROG+ for D2-Type
* *DIM- for B-Type
DA- for DA-Type
PROG- for D2-Type

※ 3 in 1 dimming function (for B-Type)

- Output constant current level can be adjusted by applying one of the three methodologies between DIM+ and DIM-: 0 ~ 10VDC, or 10V PWM signal or resistance.
- Direct connecting to LEDs is suggested. It is not suitable to be used with additional drivers.
- Dimming source current from power supply: 100μA (typ.)

◎ Applying additive 0 ~ 10VDC

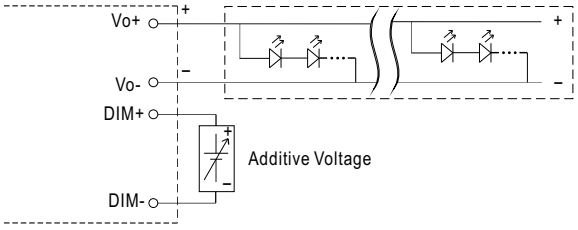

"DO NOT connect "DIM- to Vo-"

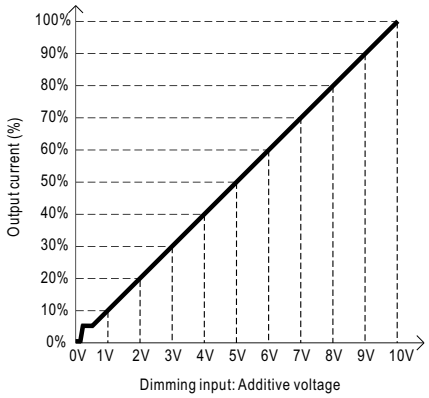

◎ Applying additive 10V PWM signal (frequency range 100Hz ~ 3KHz):

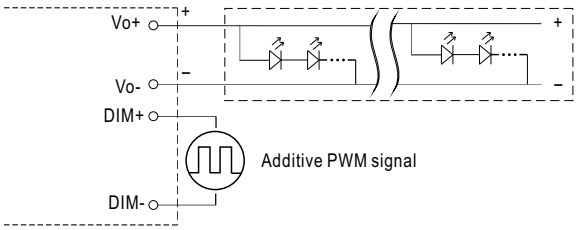

"DO NOT connect "DIM- to Vo-"

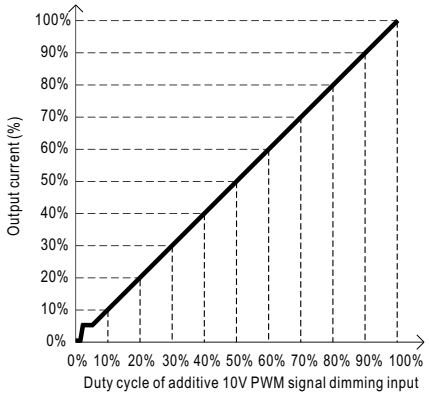

◎ Applying additive resistance:

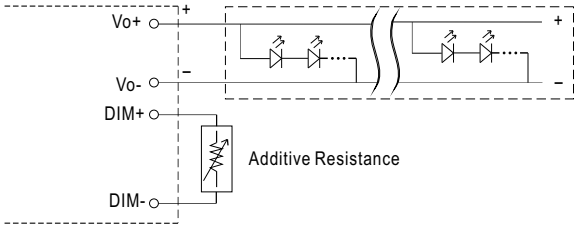

"DO NOT connect "DIM- to Vo-"

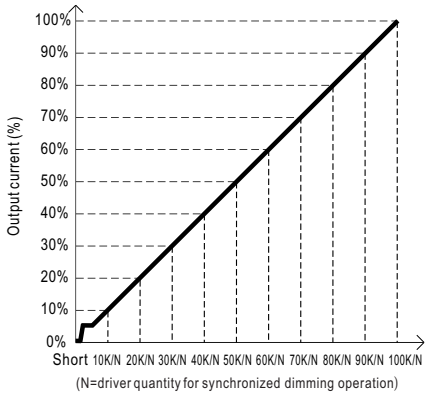

Note : 1. Min. dimming level is about 8% and the output current is not defined when 0%< Iout<8%.
2. The output current could drop down to 0% when dimming input is about 0kΩ or 0Vdc, or 10V PWM signal with 0% duty cycle.

※ **DALI Interface (primary side; for DA-Type)**

- Apply DALI signal between DA+ and DA-.
- DALI protocol comprises 16 groups and 64 addresses.
- First step is fixed at 8% of output.

※ **Smart timer dimming function (for Dxx-Type by User definition)**

MEAN WELL Smart timer dimming primarily provides the adaptive proportion dimming profile for the output constant current level to perform up to 14 consecutive hours. 3 dimming profiles hereunder are defined accounting for the most frequently seen applications. If other options may be needed, please contact MEAN WELL for details.

Ex : ◎ D01-Type: the profile recommended for residential lighting

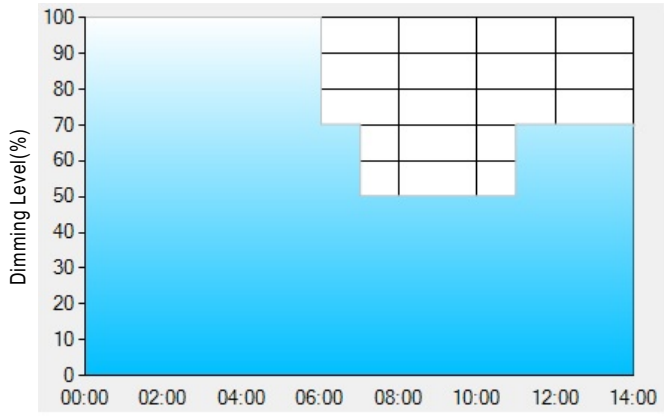

Set up for D01-Type in Smart timer dimming software program:

	T1	T2	T3	T4
TIME**	06:00	07:00	11:00	---
LEVEL**	100%	70%	50%	70%

**: TIME matches Operating Time in the diagram whereas LEVEL matches Dimming Level.

Example: If a residential lighting application adopts D01-Type, when turning on the power supply at 6:00pm, for instance:

[1] The power supply will switch to the constant current level at 100% starting from 6:00pm.

[2] The power supply will switch to the constant current level at 70% in turn, starting from 0:00am, which is 06:00 after the power supply turns on.

[3] The power supply will switch to the constant current level at 50% in turn, starting from 1:00am, which is 07:00 after the power supply turns on.

[4] The power supply will switch to the constant current level at 70% in turn, starting from 5:00am, which is 11:00 after the power supply turns on. The constant current level remains till 8:00am, which is 14:00 after the power supply turns on.

Ex: ◎ D02-Type: the profile recommended for street lighting

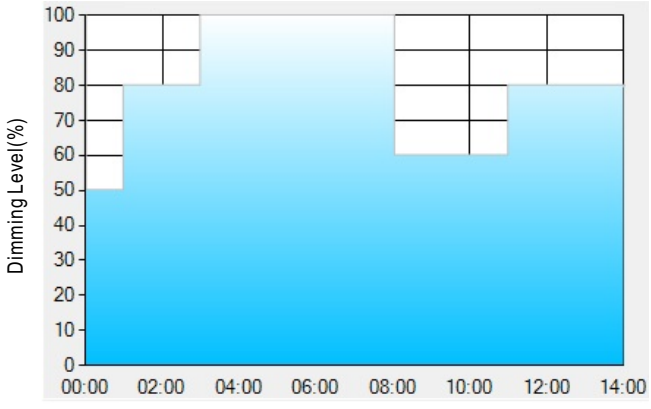

Set up for D02-Type in Smart timer dimming software program:

	T1	T2	T3	T4	T5
TIME**	01:00	03:00	8:00	11:00	---
LEVEL**	50%	80%	100%	60%	80%

**: TIME matches Operating Time in the diagram whereas LEVEL matches Dimming Level.

Example: If a street lighting application adopts D02-Type, when turning on the power supply at 5:00pm, for instance:

[1] The power supply will switch to the constant current level at 50% starting from 5:00pm.

[2] The power supply will switch to the constant current level at 80% in turn, starting from 6:00pm, which is 01:00 after the power supply turns on.

[3] The power supply will switch to the constant current level at 100% in turn, starting from 8:00pm, which is 03:00 after the power supply turns on.

[4] The power supply will switch to the constant current level at 60% in turn, starting from 1:00am, which is 08:00 after the power supply turns on.

[5] The power supply will switch to the constant current level at 80% in turn, starting from 4:00am, which is 11:00 after the power supply turns on. The constant current level remains till 6:30am, which is 14:00 after the power supply turns on.

Ex: ◎ D03-Type: the profile recommended for tunnel lighting

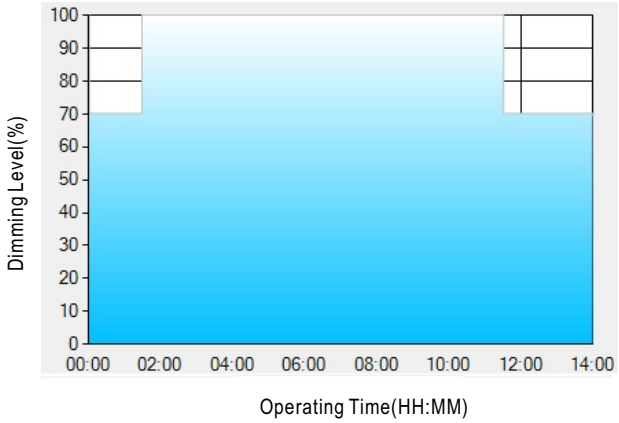

Set up for D03-Type in Smart timer dimming software program:

	T1	T2	T3
TIME**	01:30	11:00	---
LEVEL**	70%	100%	70%

**: TIME matches Operating Time in the diagram whereas LEVEL matches Dimming Level.
Example: If a tunnel lighting application adopts D03-Type, when turning on the power supply at 4:30pm, for instance:
[1] The power supply will switch to the constant current level at 70% starting from 4:30pm.
[2] The power supply will switch to the constant current level at 100% in turn, starting from 6:00pm, which is 01:30 after the power supply turns on.
[3] The power supply will switch to the constant current level at 70% in turn, starting from 5:00am, which is 11:00 after the power supply turns on.
The constant current level remains till 6:30am, which is 14:00 after the power supply turns on.

■ OUTPUT LOAD vs TEMPERATURE

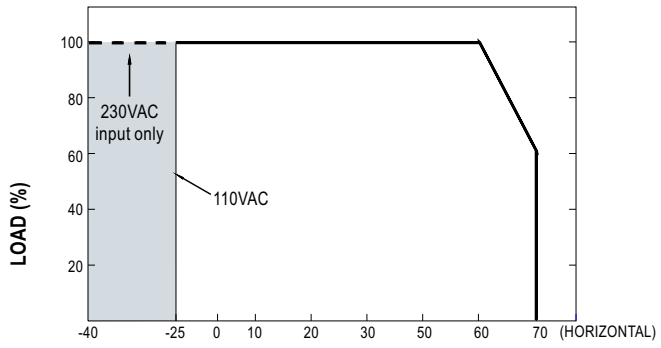

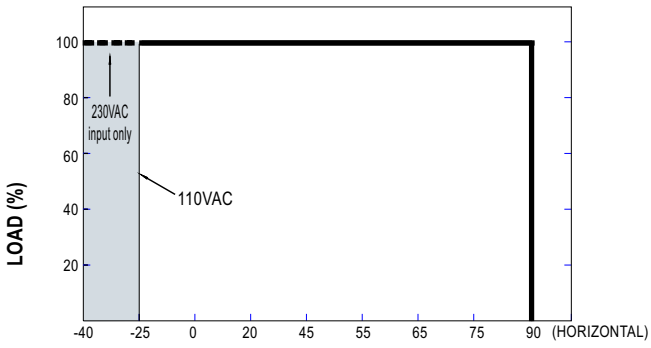

◎ If ELG-240 operates in Constant Current mode with the rated current, the maximum workable Ta is 60℃.

■ STATIC CHARACTERISTIC

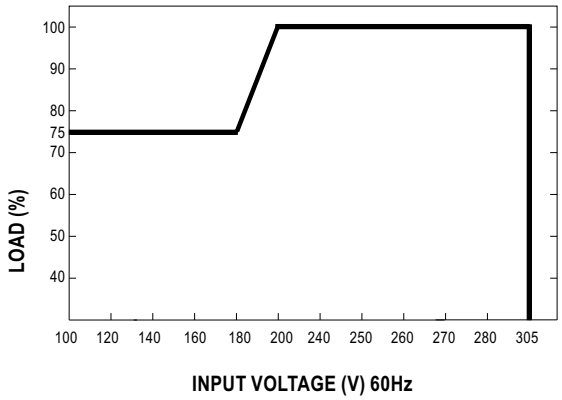

※ De-rating is needed under low input voltage.

■ POWER FACTOR (PF) CHARACTERISTIC

※ Tcase at 80℃

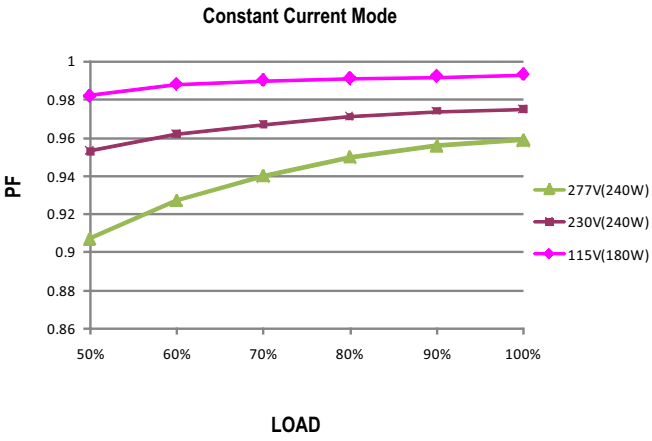

■ TOTAL HARMONIC DISTORTION (THD)

※ 48V Model, Tcase at 80℃

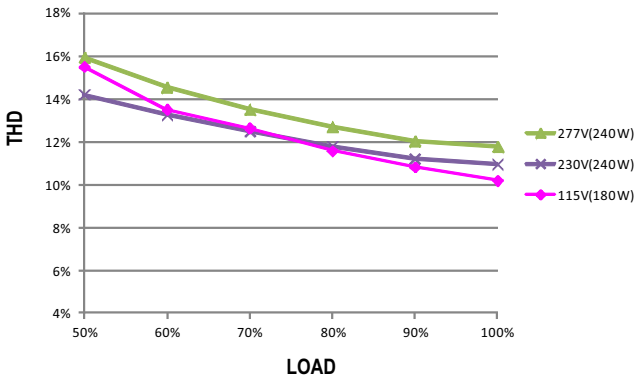

■ EFFICIENCY vs LOAD

ELG-240 series possess superior working efficiency that up to 93% can be reached in field applications.

※ 48V Model, Tcase at 80℃

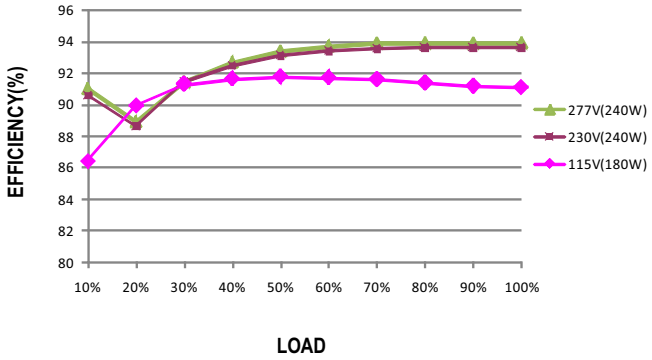

■ LIFE TIME

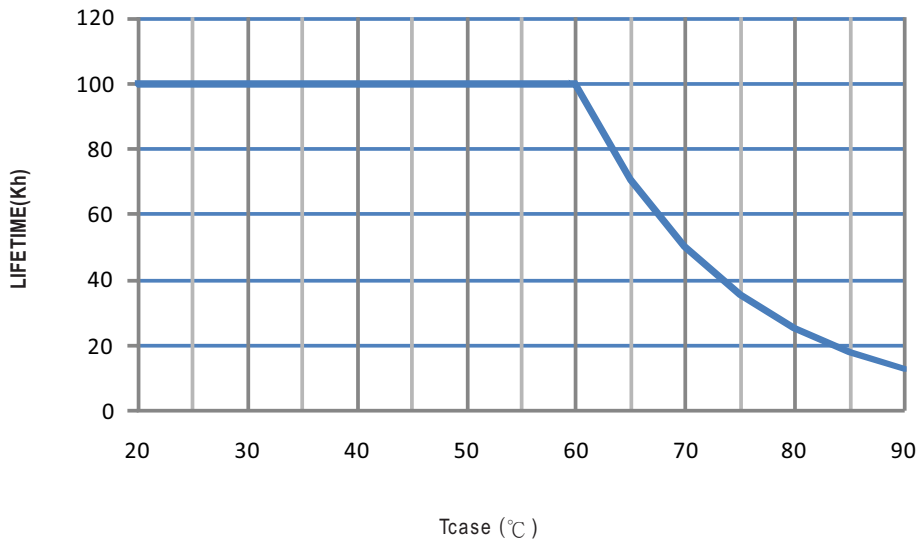

■ MECHANICAL SPECIFICATION

※ **Blank-Type**

CASE NO.: 245A Unit:mm

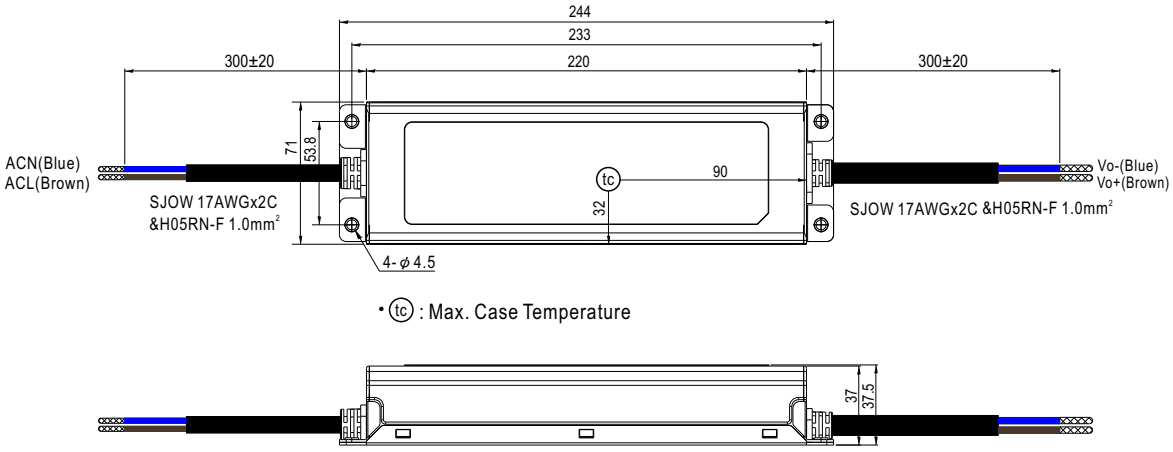

• tc : Max. Case Temperature

※ **A-Type**

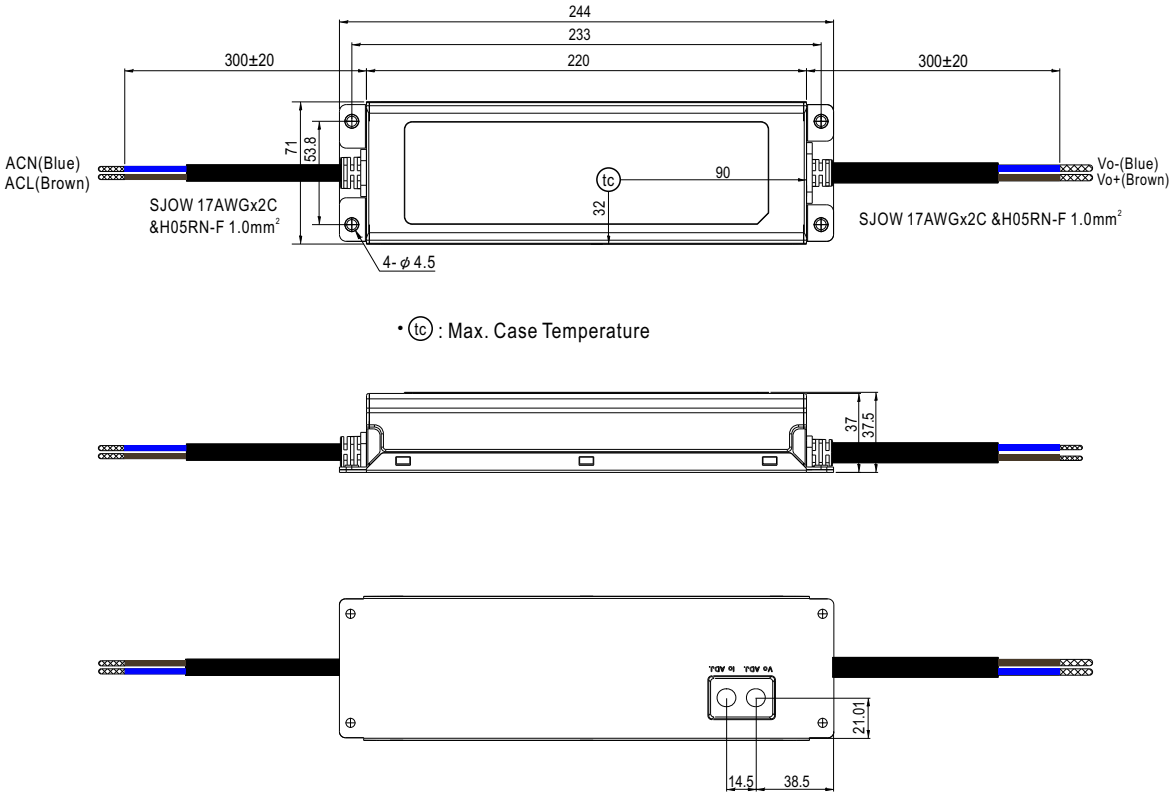

• tc : Max. Case Temperature

※ **B/DA/D2-Type**

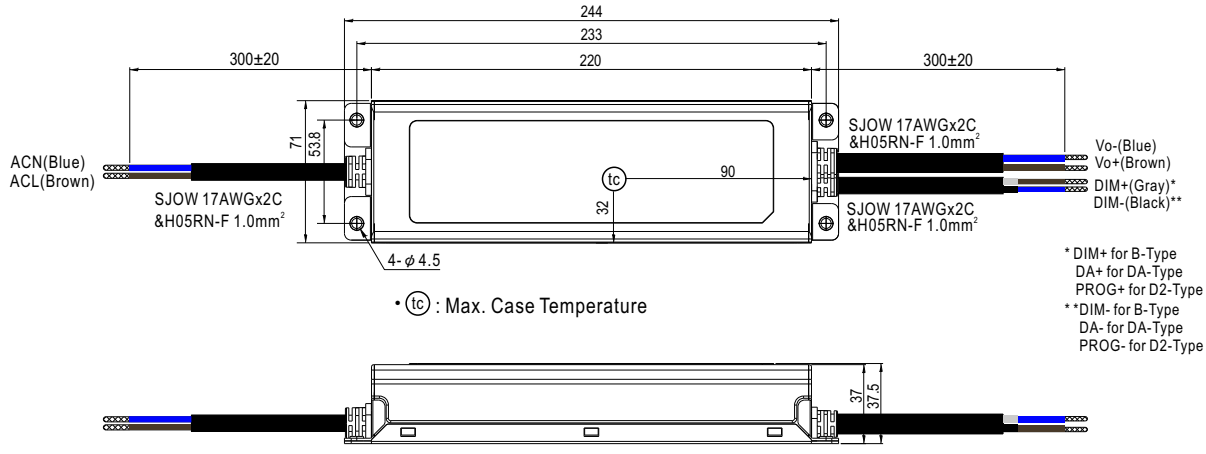

※ **3Y Model (3-wire input)**

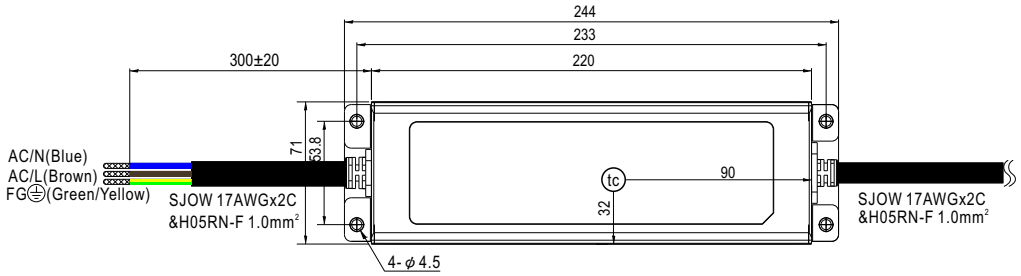

◎ Note1: Please connect the case to FG for the complete EMC deliverance.
◎ Note2: Please contact MEAN WELL for input wiring option with FG.

■ INSTALLATION MANUAL

Please refer to : http://www.meanwell.com/manual.html